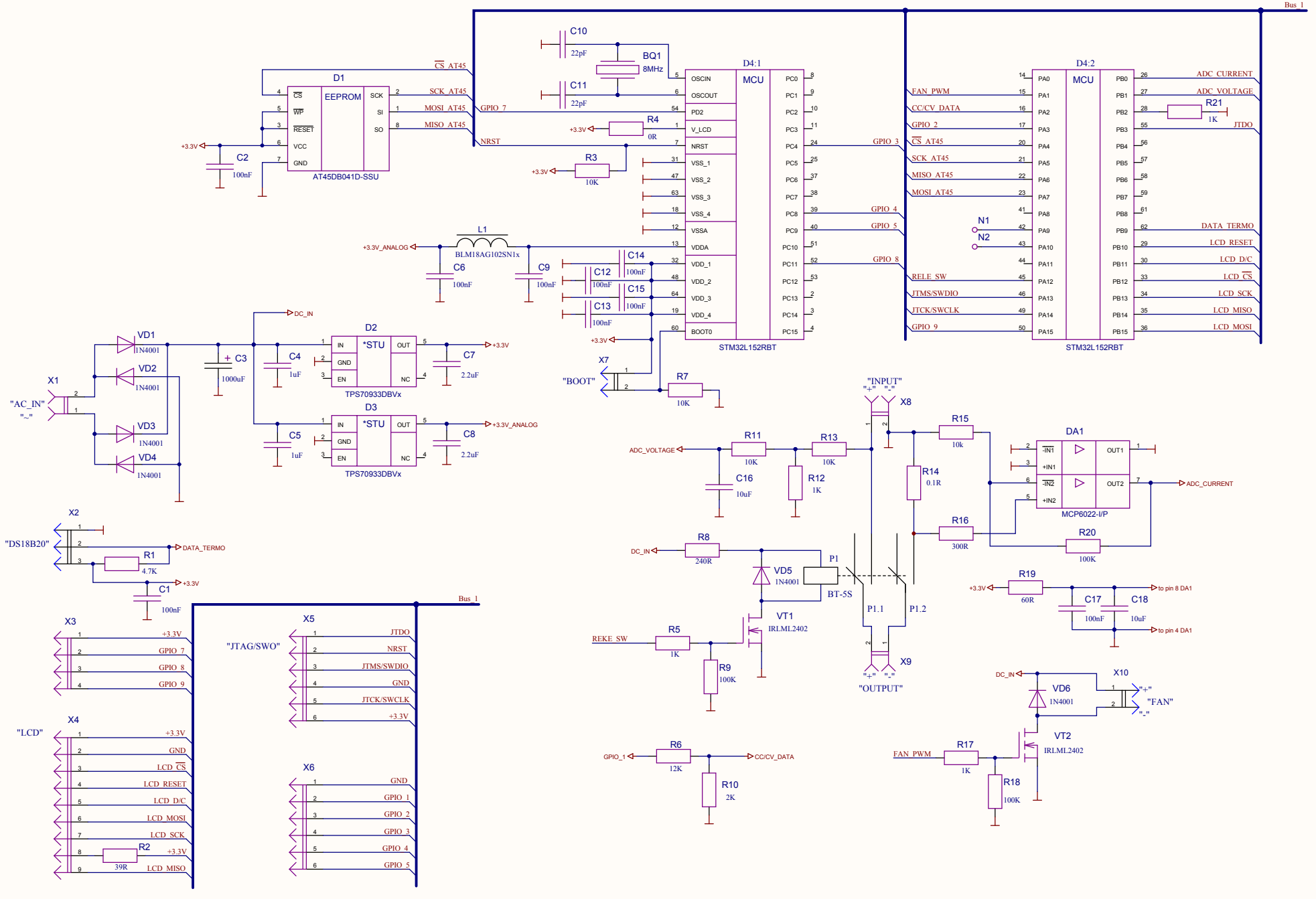
Bus_1
D1
EEPROM
AT45DB041D-SSU
CS
WP
RESET
VCC
GND
SCK
SI
SO
CS_AT45
SCK_AT45
MOSI_AT45
MISO_AT45
GPIO_7
NRST
+3.3V
C2
100nF
C10
22pF
C11
22pF
BQ1
8MHz
R4
0R
R3
10K
D4:1
MCU
STM32L152RBT
OSCIN
OSCOUT
PD2
V_LCD
NRST
VSS_1
VSS_2
VSS_3
VSS_4
VSSA
VDDA
VDD_1
VDD_2
VDD_3
VDD_4
BOOT0
PC0
PC1
PC2
PC3
PC4
PC5
PC6
PC7
PC8
PC9
PC10
PC11
PC12
PC13
PC14
PC15
GPIO_3
GPIO_4
GPIO_5
GPIO_8
D4:2
MCU
STM32L152RBT
FAN_PWM
CC/CV_DATA
GPIO_2
CS_AT45
SCK_AT45
MISO_AT45
MOSI_AT45
RELE_SW
JTMS/SWDIO
JTCK/SWCLK
GPIO_9
PA0
PA1
PA2
PA3
PA4
PA5
PA6
PA7
PA8
PA9
PA10
PA11
PA12
PA13
PA14
PA15
PB0
PB1
PB2
PB3
PB4
PB5
PB6
PB7
PB8
PB9
PB10
PB11
PB12
PB13
PB14
PB15
ADC_CURRENT
ADC_VOLTAGE
R21
1K
JTDO
DATA_TERMO
LCD_RESET
LCD_D/C
LCD_CS
LCD_SCK
LCD_MISO
LCD_MOSI
N1
N2
L1
BLM18AG102SN1x
+3.3V_ANALOG
C6
100nF
C9
100nF
C14
100nF
C12
100nF
C15
100nF
C13
100nF
X7
"BOOT"
R7
10K
DC_IN
VD1
1N4001
VD2
1N4001
VD3
1N4001
VD4
1N4001
X1
"AC_IN"
"~"
C3
1000uF
C4
1uF
C5
1uF
D2
D3
*STU
IN
GND
EN
OUT
NC
TPS70933DBVx
C7
2.2uF
C8
2.2uF
+3.3V
+3.3V_ANALOG
X2
"DS18B20"
R1
4.7K
DATA_TERMO
C1
100nF
X3
+3.3V
GPIO_7
GPIO_8
GPIO_9
X4
"LCD"
GND
LCD_CS
LCD_RESET
LCD_D/C
LCD_MOSI
LCD_SCK
LCD_MISO
R2
39R
"JTAG/SWO"
X5
JTDO
NRST
JTMS/SWDIO
GND
JTCK/SWCLK
X6
GND
GPIO_1
GPIO_2
GPIO_3
GPIO_4
GPIO_5
"INPUT"
"+"
"-"
X8
ADC_VOLTAGE
R11
10K
R13
10K
C16
10uF
R12
1K
R15
10k
R14
0.1R
R16
300R
DA1
MCP6022-I/P
-IN1
+IN1
-IN2
+IN2
OUT1
OUT2
ADC_CURRENT
R20
100K
R8
240R
VD5
1N4001
P1
BT-5S
P1.1
P1.2
X9
"OUTPUT"
R19
60R
C17
100nF
C18
10uF
to pin 8 DA1
to pin 4 DA1
VT1
IRLML2402
REKE_SW
R5
1K
R9
100K
DC_IN
VD6
1N4001
X10
"FAN"
VT2
IRLML2402
FAN_PWM
R17
1K
R18
100K
GPIO_1
R6
12K
CC/CV_DATA
R10
2K